# 5-Port Super High Power PoE Switch with 4 PoE Ports and 1 Fiber Port (ONV-POE34001PF)

## 5-Port PoE Switch (ONV-POE34001PF)



◆Can supply power to network surveillance cameras that without PoE function
◆ 4x 10/100Mbps PoE ports, 1x optical fiber SC interface
◆Supports port auto-flip (Auto MDI/ MDIX)
◆External power supply in total is 120W.
◆1x high power PoE port with maximum power: 60W
◆Power of other PoE ports: 15.4W per port
◆Adopts store-and-forward architecture
◆ IEEE 802.3af power on up to 4 ports
◆Features with fan-less, natural cooling, small, compact and quiet design, suitable for desktop or wall

## Product Description

This ONV-POE34001PF switch provides a network point for power supply and data transmission. All the 5 Ethernet ports can be connected with 10/100Mps quickly. The uplink port optical fiber SC interface. 1-4 port can provide power supply with IEEE 802.3af standard, among which 1 port supports super high power 60W for each. The advanced self-sensing algorithm supply power for IEEE802af terminal unit only, avoiding damaging proprietary PoE or non-PoE standard equipment. In addition, it will stop power supply when PoE devices are not connected. In short, This switch features simple and reliable design, automatic identification PoE requirements, duplex and high-speed.

This cost-effective ONV-POE34001PF provide network layout need to simplify wireless access point (AP) and IP-based surveillance cameras network cameras in order to install in commercial network and home network. The devices far away from power socket are very suitable for hanging on the wall or ceiling. PoE eliminates the need for connecting these devices to power socket. So it make more flexible for those difficult to connect with AC power socket, and cut down the installation cost. It is ideal choice for those want to deploy a small commercial network and home network that use wireless access point (AP) and IP-based surveillance cameras.

## Technical Specification

| | |
|---|---|
| **Product Name** | 5-Port High Power PoE Switch with 4 PoE Ports and 1 Uplink Port |
| **Product Model** | ONV-POE34001PF |
| **Connector** | 10/100M copper cable RJ45 ports(all ports support MDI/MDIX)<br>4x PoE ports(2x 60W included) + 1x optical fiber SC interface |
| **Transfer Mode** | Store-And-Forward |
| **Network Medium** | 10BASE-T: Cat3,4,5 UTP(≤100 meter)<br>100BASE-TX: Cat5 or more UTP (≤100 meter) |
| | Data transmission distance: 25km |
| **Performance Specifications** | Bandwidth: 1.6Gbps (non-blocking)<br>Network Latency (100 to 100M bps): maximum delay less than 20 microseconds<br>Packet Buffer Memory: 96KB<br>Address Database Size: 1,000<br>MTBF: 190,000 hours (about 21 years) |
| **Network Protocols and Standards** | IEEE 802.3i 10BASET<br>IEEE 802.3u 100BASETX<br>IEEE 802.3x Flow Control<br>IEEE 802.1af DTE Power via MDI<br>IEEE 802.3af |
| **LEDs Status** | System: power supply<br>Every Port: connecting, PoE working status |
| **Power** | Maximum PoE power in total: 120W<br>1x high power PoE port with maximum power: 60W<br>Power for each PoE port:15.4 W<br>Power input: AC100-240V 50/60Hz; (every country use a custom power plug) |
| **Dimensions/Weight** | Dimensions: 185X113X36mm, 0.4kg |
| **Working Environment** | Operating Temperature: -20° ~ 55 ° C<br>Storage Temperature: -30 ° ~ 75 ° C<br>Operating Humidity: 10% ~ 90%, non-condensing |
| **Radiation** | CE mark, commercial<br>FCC Part 15 Class B<br>VCCI Class B<br>EN 55022 (CISPR 22), Class B |
| **Safety** | CE Mark ,commercial<br>CE/LVD EN60950, RoHS |
| **Warranty** | 1 year warranty (2 yeas warranty for power adapter) |

## Product Size Display

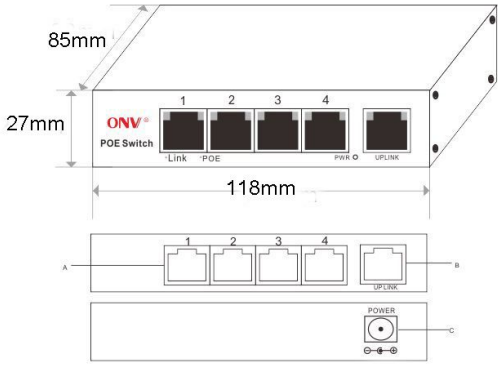


A. 4x PoE Power Supply Port

B. Uplink Port

C. DC 48V Input

## Product Usage Display

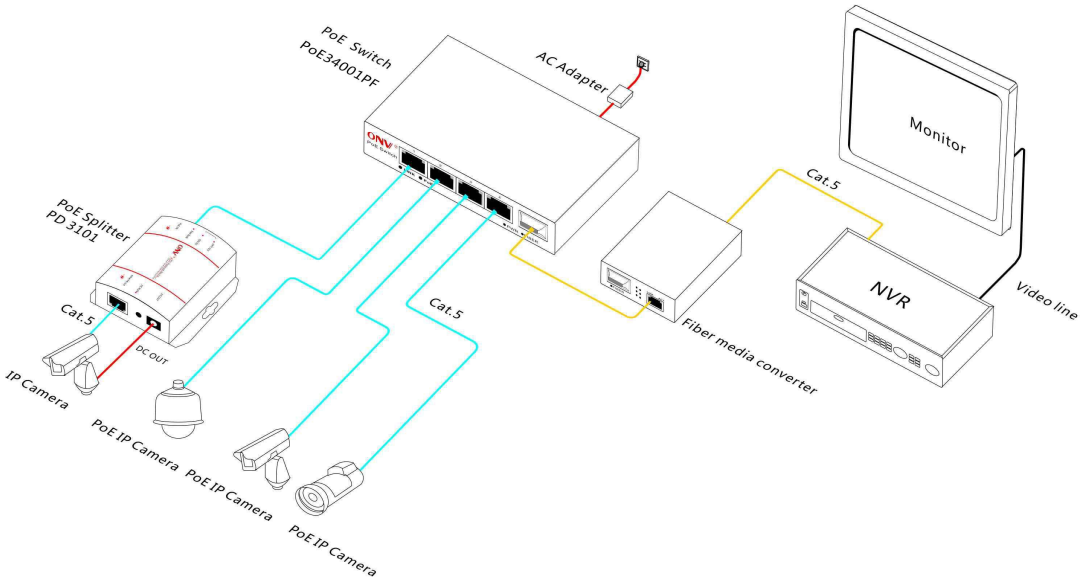

## Product Ordering Information

**Product Model:** ONV-POE34001PF

**Product Description:** 5-Port PoE switch, 4x 10/100Mbps PoE ports + 1x optical fiber SC interface, 1 port supports super high power with 60W. Total power is 120W.

**Ordering Notes:** PoE default power supply is end-span (1/2, 3/6 line pair).
Alternative PoE Power supply is mid-span (4/5, 7/8 line pair)

## Product Packing Lists

| | |
|---|---|
| **Packing Lists** | **5-Port PoE Switch with 4 PoE Ports and 1** optical fiber SC interface**(ONV-POE34001PF)** |
| | Power Adapter |
| | User Guide |
| | Warranty Card |